41034 & 42059 Electronic Components & Fabrication: Week 5 Lab Report

Name: Thomas Boardman
Student ID: 24820122

Exercise 1 - Create the D-latch circuit in S-Edit and obtain the output waveforms

Creating NAND Symbol:

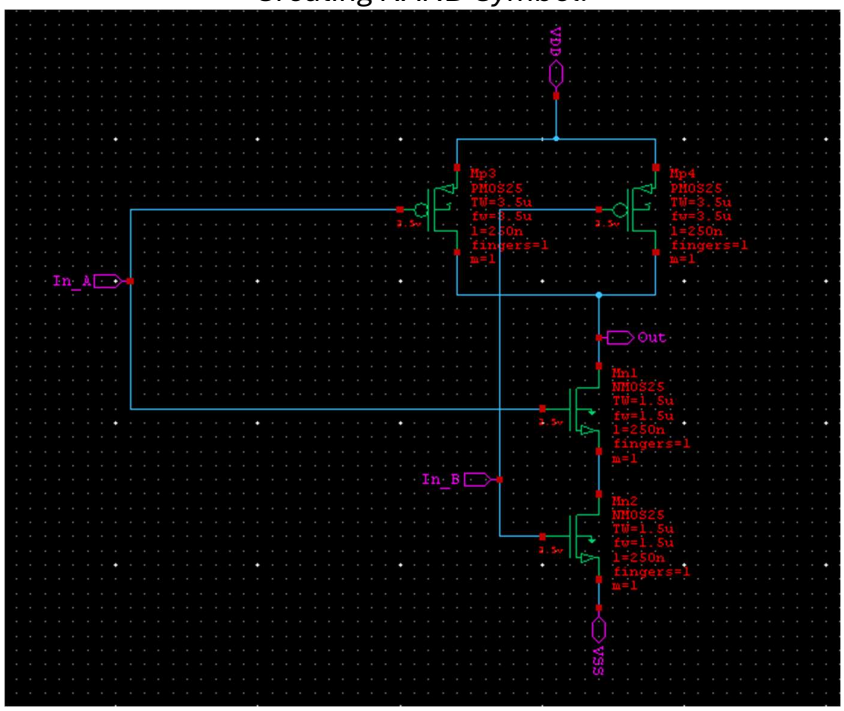

Figure 1: NAND Circuit Schematic

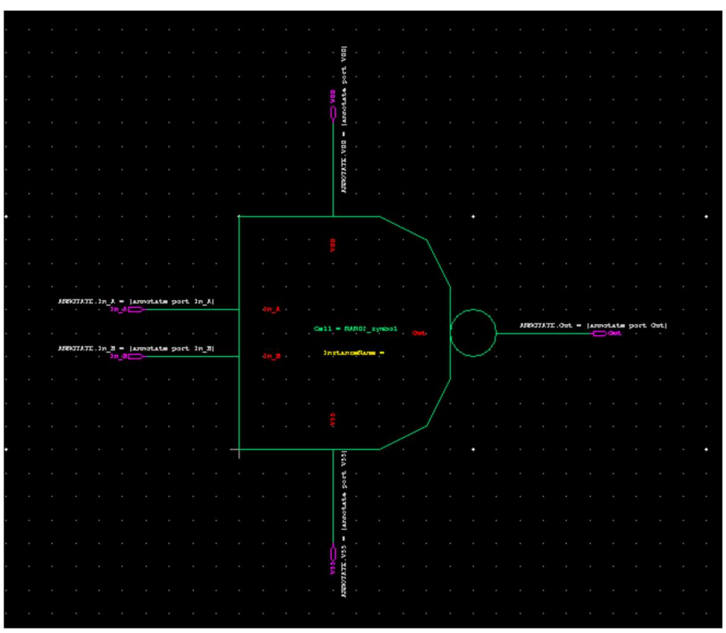

Figure 2: NAND Symbol

Creating D-Latch Circuit:

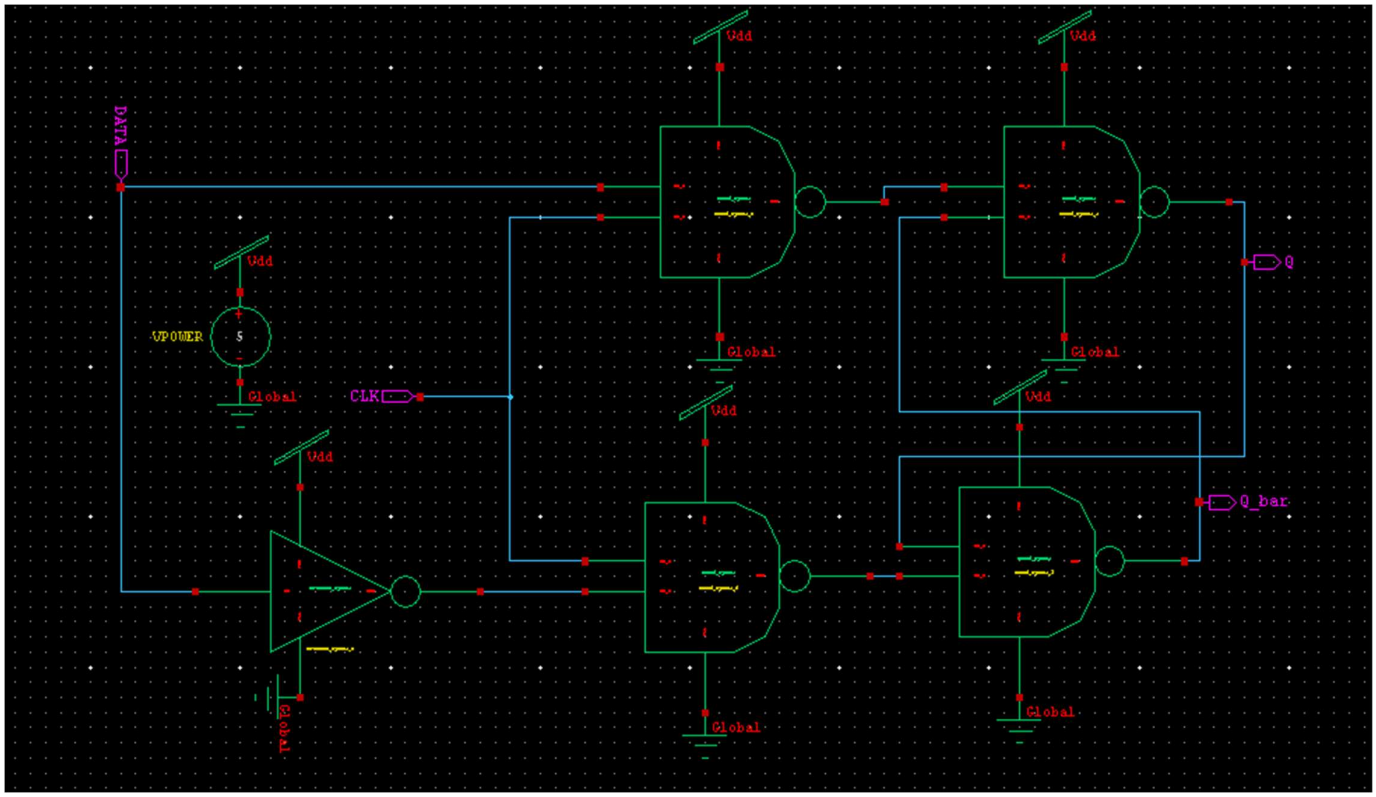

Figure 3: D-Latch Circuit Schematic using NAND and NOT

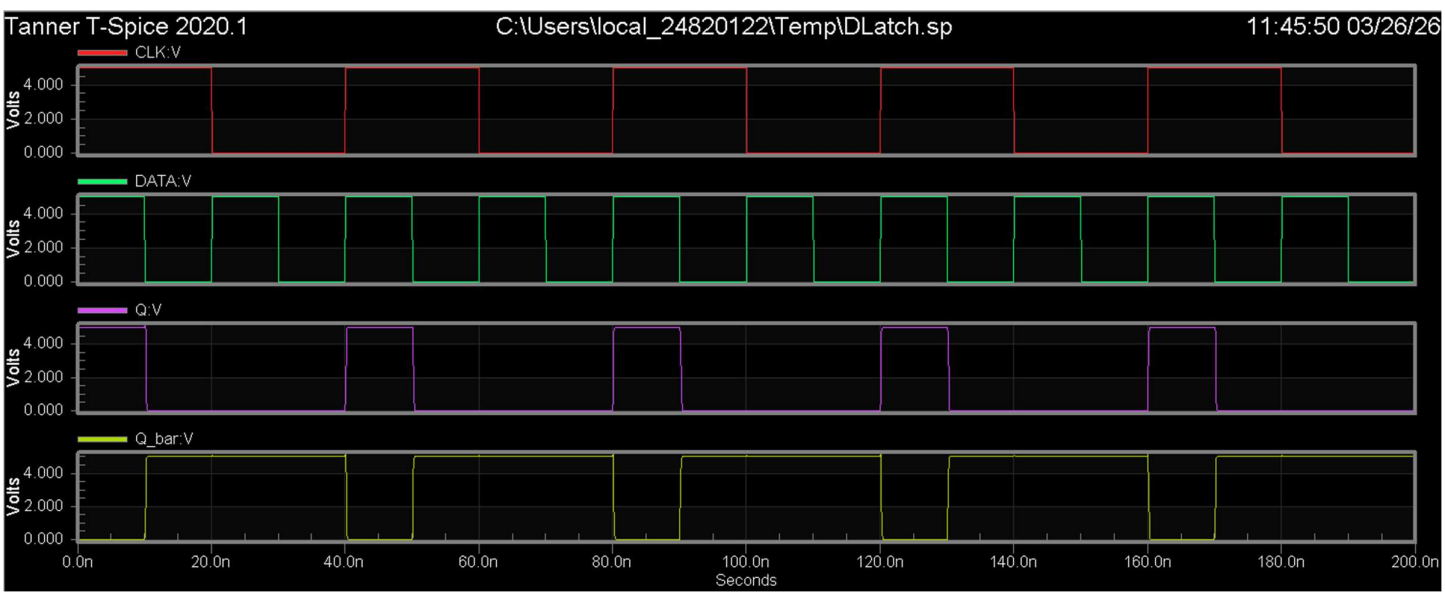

Figure 4: D-Latch Output Waveforms of CLK, DATA, Q, and Q_Bar.

The output waveforms correctly display the operation of the D-Latch. When the CLK signal is high the latch is in a transparent state which means the output Q follows the input of DATA. This is seen in Figure 4 as the change in DATA is reflected in Q during the highs of the CLK.

When the CLK is low the latch enters an unchanged state and the output Q remains at the previous voltage regardless of any changes in DATA value confirming that the D-Latch waveforms are correct.

Additionally, Q_bar is always the logical inverse of Q, which is demonstrated in Figure 4.

Exercise 2: Measuring the Propagation Delay in T-Spice

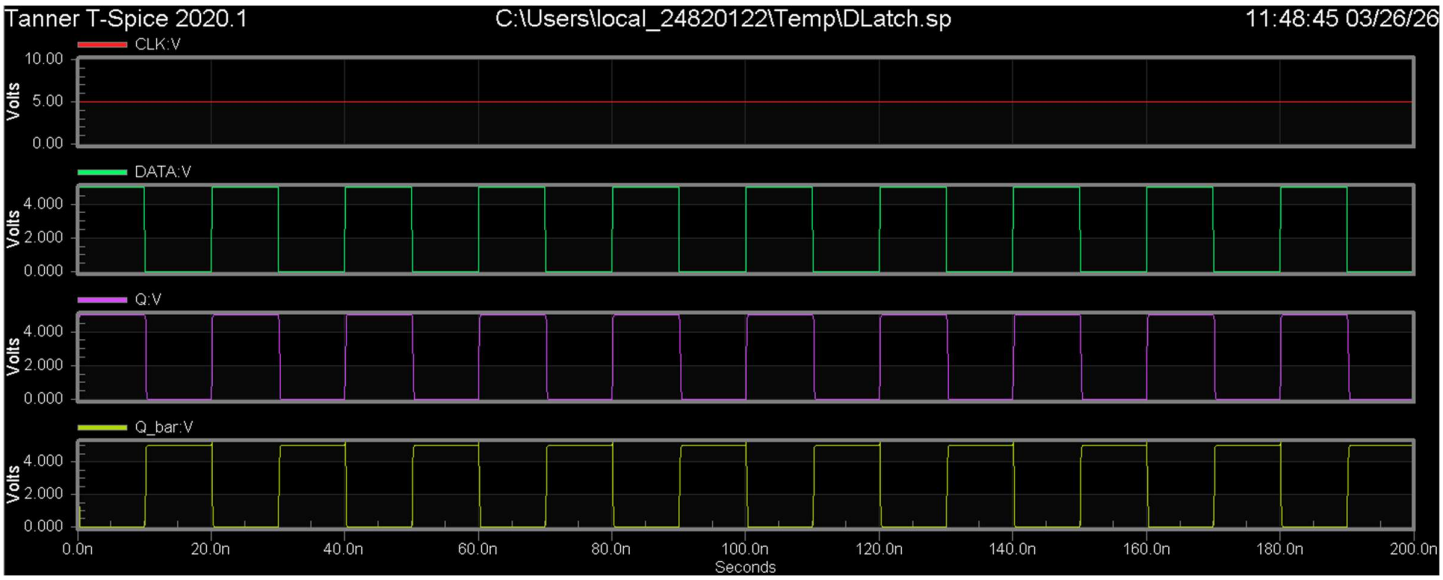

Figure 5: D-Latch Output Waveforms of CLK, DATA, Q, and Q_Bar with a constant CLK input of 5V.

```
Measurement result summary
   tpd_r            =  110.9026p
   tpd_f            =  235.3171p
```

Figure 6: Measurement displaying propagation delay of tpd_r and tpd_f within the D-Latch.

$$t_{pd(avg)} = \frac{t_{pd_r} + t_{pd_f}}{2}$$

$$t_{pd(avg)} = \frac{110.9026 + 235.2171}{2} = 173.0585\ ps$$

The propagation delay of the D-Latch measured both the falling and rising transitions, the rising delay was 110.9026ps while the falling was 235.2171ps. The average propagation delay was calculated as 173.05985ps, in which the difference is due to the asymmetry between the NMOS and PMOS transistors and the internal structure of the NAND latch.

Exercise 3: Measure average power consumption

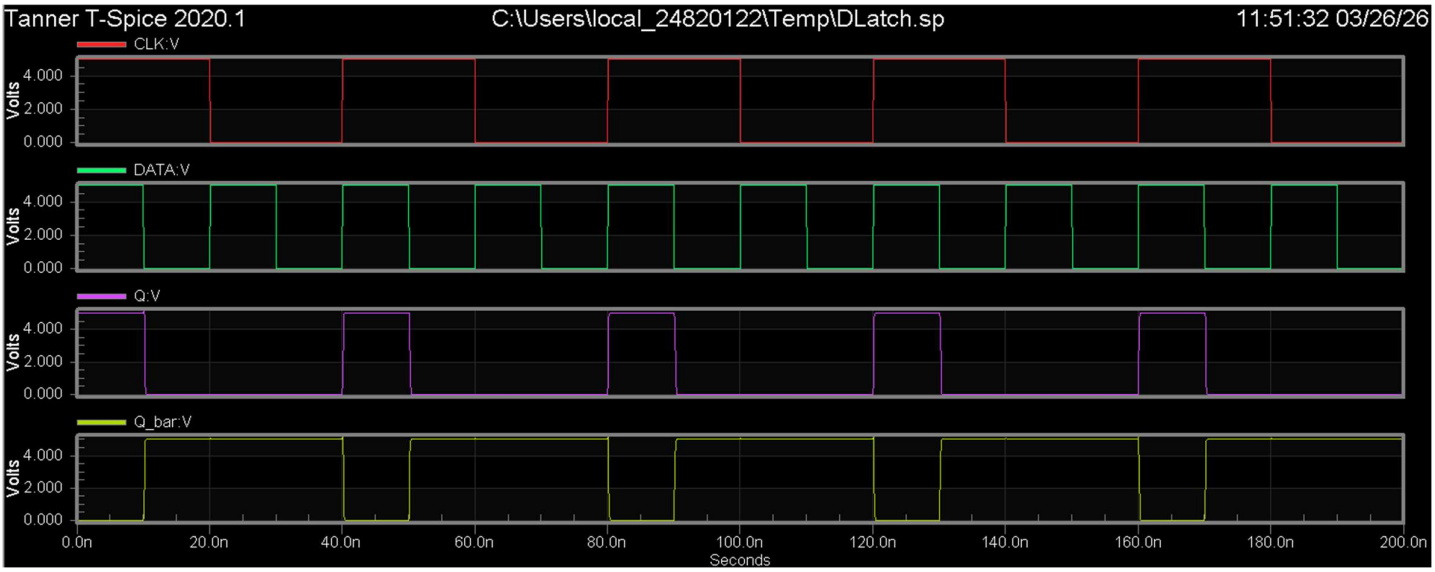

Figure 7: D-Latch Output Waveforms of CLK, DATA, Q, and Q_Bar at 25MHz and a 50% Duty Cycle.

```
Measurement result summary
   tpd_r            =   80.1287n
   tpd_f            =   40.2353n
   Iavg             =  -28.8454u
   Pavg             =  144.2272u
```

Figure 8: Measurement displaying average supply current and average power consumption in the D-Latch.

$$P_{avg} = -V \cdot I_{avg} = -5 \times (-28.8454 \times 10^{-6})$$
$$P_{avg} = 144.227\ \mu W$$

The average current drawn from the power supply was measured as -28.84uA, with the value being negative indicating that the current is flowing into the circuit.

The average power consumption was calculated as 144.227μW when using a 5V input with a 25MHz and 50% duty cycle. The power consumption is relatively low as it reflects how efficient the CMOS logic is, as most of the power is consumed during the switching transitions.

Exercise 4: Evaluate the average power consumption under different clock frequencies to verify that power consumption is proportional to operating frequency.

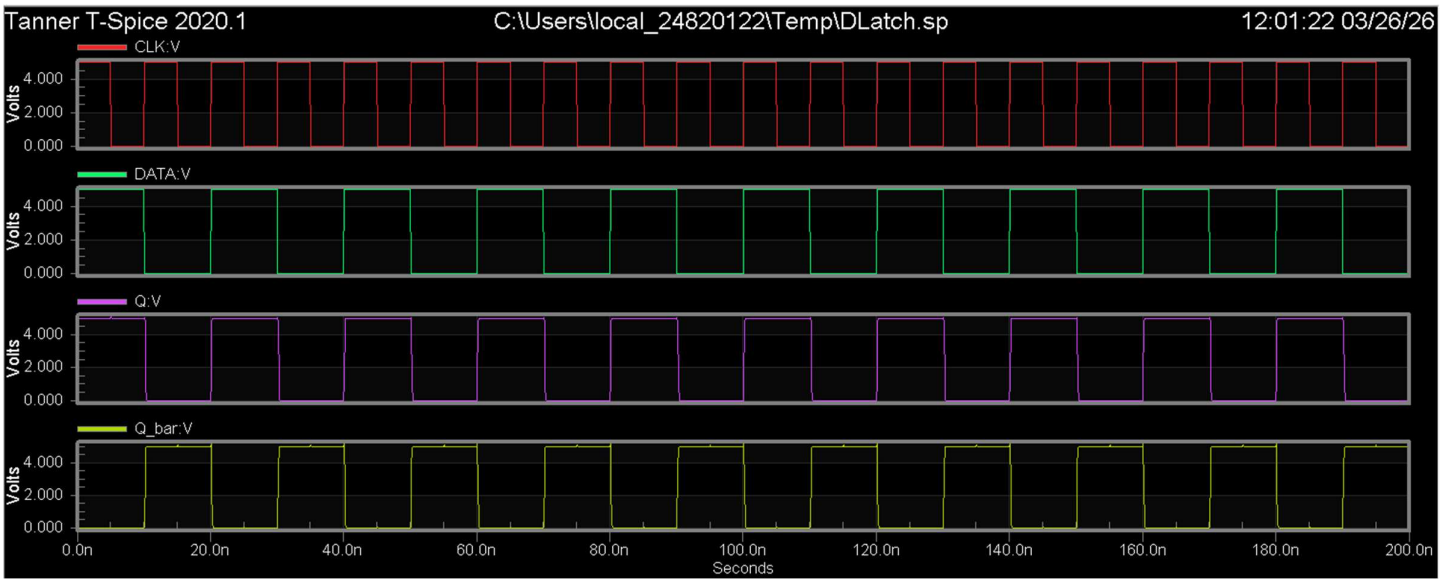

Figure 9: D-Latch Output Waveforms of CLK, DATA, Q, and Q_Bar at 100MHz and a 50% Duty Cycle.

```
Measurement result summary
   tpd_r          =   20.1196n
   tpd_f          =  237.6529p
   Iavg           =  -50.8929u
   Pavg           =  254.4644u
```

Figure 10: Measurement displaying average supply current and average power consumption in the D-Latch at 100MHz and 50% Duty Cycle.

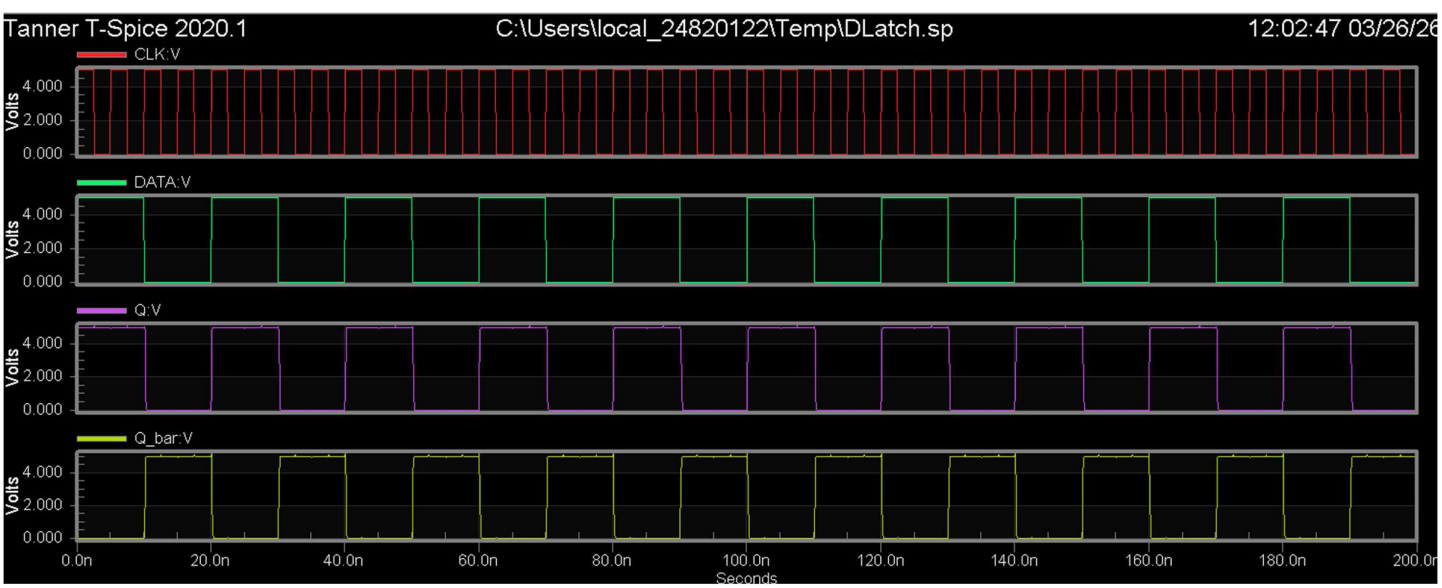

Figure 11: D-Latch Output Waveforms of CLK, DATA, Q, and Q_Bar at 200MHz and a 50% Duty Cycle.

```
Measurement result summary
   tpd_r          =   20.1196n
   tpd_f          =  237.7193p
   Iavg           =  -68.4405u
   Pavg           =  342.2027u
```

Figure 12: Measurement displaying average supply current and average power consumption in the D-Latch at 200MHz and 50% Duty Cycle.

Results and Analysis:

Frequency (MHz)	*Period (ns)*	*Power (μW)*
25	40	144.227
100	10	254.464
200	5	342.202

The average power consumption was measured at different clock frequencies while maintaining a constant 50% duty cycle. The average power consumption increases as the clock frequency increases. At 25MHz the power consumption is 144.227μW rising to 254.464 at 100MHz and then to 342.202 at 200MHz.

This trend shows a positive relationship between frequency and power, consistent with the CMOS theory where power is proportional to the frequency. However, the results illustrated are not perfectly linear, likely due to the non-ideal effects such as parasitic capacitances and switching lose in the circuit schematics.

Overall, the results confirm that the higher frequency led to higher power consumption.